EN

Datasheet

RS Article: 177 - 0114
DC – D Frame Solenoid 24V

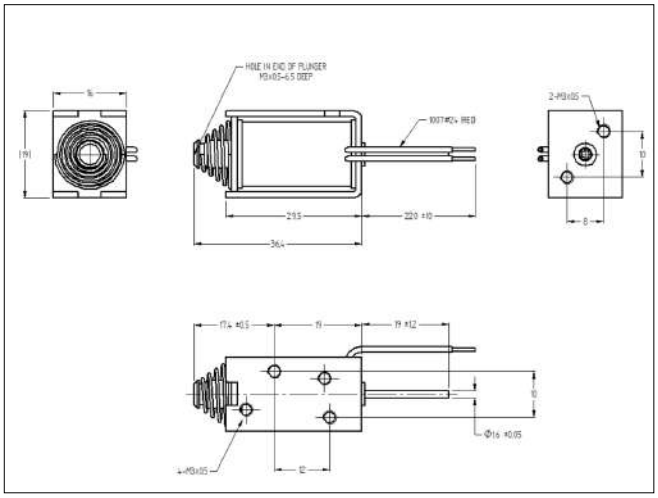

Specifications:

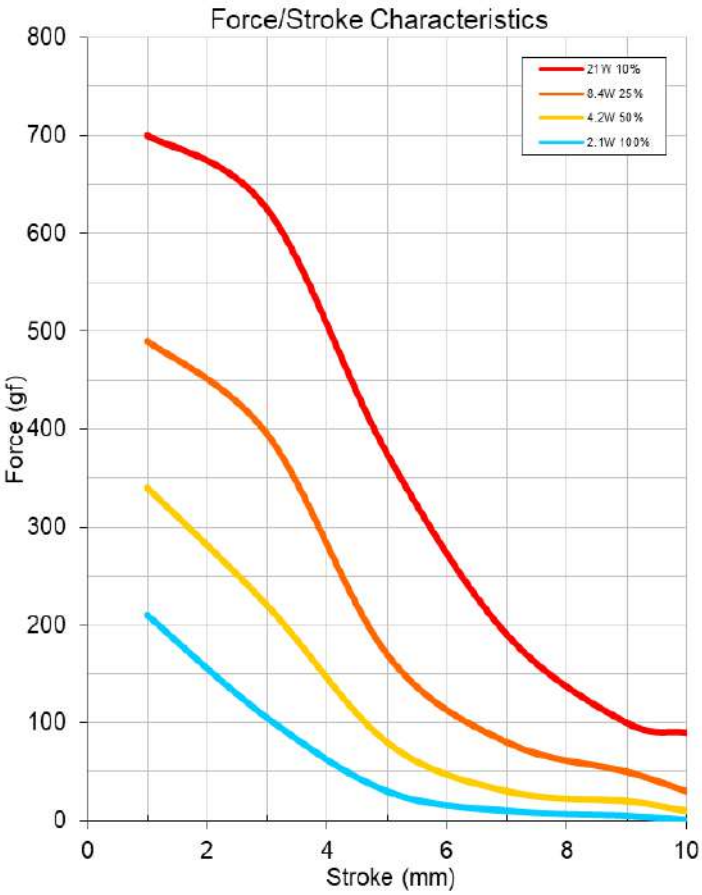

Features:

- Push type
- Flying leads
- Corrosion resistant plated parts
- Complete with spring

Duty Cycle % = $\frac{\text{"ON" Time}}{\text{"ON" Time + "OFF" Time}}$ x100%	Continuous (100%)	Intermittent (50%)	Intermittent (25%)	Intermittent (10%)
MAX "ON" Time in seconds	∞	55	19	3
Watts @ 20°C	2.1	4.2	8.4	21
20°C Resistance (20°C)±10%	DC Volts			
17.1	6	8.5	12	19
69	12	17	24	38
275	24	34	48	76
1095	48	68	96	152